Electrolux PROFESSIONAL

Modular Cooking Range Line 900XP 4-Burner Gas Range on Gas Oven

ITEM #

MODEL #

NAME #

SIS #

AIA #

391005 (E9GCGH4CG0)	4-Burner (1x10 kW, 3x6 kW) gas Range on gas Oven (8,5 kW)

Short Form Specification

Item No.

To be installed on stainless steel feet with height adjustment up to 50 mm. High efficiency flower flame burners with continuous power regulation and optimized combustion. Flame failure device as standard on burners to protect against accidental extinguishing. Oven chamber with 3 levels of runners to accomodate 2/1 GN shelves (2 steam pans). Ribbed, cast-iron oven base plate. Exterior panels of unit in stainless steel with Scotch Brite finish. Pan supports in heavy duty cast iron. Extra strength work top in heavy duty 2 mm stainless steel. Right-angled side edges to allow flush-fitting junction between units.

APPROVAL:

Main Features

- Unit to be mounted on stainless steel feet with height adjustment up to 50 mm. Unit can be easily mounted on cantilever systems.
- The three 6 kW and one 10 kW high efficiency burners are available in two different sizes to suit high performing cooking requirements of the most demanding customers:
  -60 mm burners with continuous power regulation from 1,5 to 6 kW
  -100 mm burners with continuous power regulation from 2.2 kW to 10 kW
- Gas appliance supplied for use with natural or LPG gas, conversion jets supplied as standard.
- Large sized pan support in cast iron (stainless steel as option) with long center fins to allow the use of the largest down to the smallest pans.
- Burners with optimized combustion.
- Flame failure device on each burner protects against gas leakage when accidental extinguishing of the flame occurs.
- Protected pilot light.
- Base compartment consists of a gas heated standard oven with stainless steel burners and self stabilizing flame positioned beneath the base plate. Oven chamber to have 3 levels of runners to accomodate 2/1 GN shelves (2 steam pans) and ribbed cast iron base plate.
- Oven thermostat adjustable from 120 °C to 280 °C.
- 40 mm thick oven door for heat insulation.
- The special design of the control knob system guarantees against water infiltration.
- IPX5 water protection.
- Control knobs provide smooth, continuous rotation from min to max power level.

Construction

- Unit is 930 mm deep to give a larger working surface area.
- All exterior panels in Stainless Steel with Scotch Brite finishing.
- AISI 304 stainless steel worktop, 2mm thick.
- Model has right-angled side edges to allow flush fitting joints between units, eliminating gaps and possible dirt traps.

Included Accessories

- 1 of GN2/1 chrome grid for static oven — PNC 164250

Optional Accessories

- GN2/1 chrome grid for static oven — PNC 164250 ❑
- Junction sealing kit — PNC 206086 ❑

- Draught diverter, 150 mm diameter PNC 206132 ❑
- Matching ring for flue condenser, 150 mm diameter PNC 206133 ❑
- Kit 4 wheels - 2 swivelling with brake - it is mandatory to install Base support and wheels PNC 206135 ❑
- Flanged feet kit PNC 206136 ❑
- Frontal kicking strip for concrete installation, 800mm PNC 206148 ❑
- Frontal kicking strip for concrete installation, 1000mm PNC 206150 ❑
- Frontal kicking strip for concrete installation, 1200mm PNC 206151 ❑
- Frontal kicking strip for concrete installation, 1600mm PNC 206152 ❑
- Pair of side kicking strips for concrete installation PNC 206157 ❑
- Single burner radiant plate for pan support PNC 206170 ❑
- Single burner smooth plate for direct cooking - fits frontal burners only PNC 206171 ❑
- Single burner ribbed plate for direct cooking - fits frontal burners only PNC 206172 ❑
- Frontal kicking strip, 800mm (not for refr-freezer base) PNC 206176 ❑
- Frontal kicking strip, 1000mm (not for refr-freezer base) PNC 206177 ❑
- Frontal kicking strip, 1200mm (not for refr-freezer base) PNC 206178 ❑
- Frontal kicking strip, 1600mm (not for refr-freezer base) PNC 206179 ❑
- Pair of side kicking strips (not for refr-freezer base) PNC 206180 ❑
- 2 panels for service duct for single installation PNC 206181 ❑
- 2 panels for service duct for back to back installation PNC 206202 ❑
- Kit 4 feet for concrete installation (not for 900 line free standing grill) PNC 206210 ❑
- Sediment tray for 15lt fryers PNC 206235 ❑
- Flue condenser for 1 module, 150 mm diameter PNC 206246 ❑
- Water column with swivel arm (water column extension not included) PNC 206289 ❑
- Water column extension for 900 line PNC 206290 ❑
- Stainless steel double grid for 2 burners PNC 206298 ❑
- Chimney upstand, 800mm PNC 206304 ❑
- Back handrail 800 mm PNC 206308 ❑
- Back handrail 1200 mm PNC 206309 ❑
- Wok pan support for open burners (700/900) PNC 206363 ❑
- Base support for feet or wheels - 800mm (700/900) PNC 206367 ❑
- Base support for feet or wheels - 1200mm (700/900) PNC 206368 ❑
- Base support for feet or wheels - 1600mm (700/900) PNC 206369 ❑
- Base support for feet or wheels - 2000mm (700/900) PNC 206370 ❑
- Rear paneling - 800mm (700/900) PNC 206374 ❑
- Rear paneling - 1000mm (700/900) PNC 206375 ❑
- Rear paneling - 1200mm (700/900) PNC 206376 ❑
- Kit town gas nozzles (G150) for 900 gas ranges on gas oven PNC 206385 ❑
- Chimney grid net, 400mm (700XP/900) PNC 206400 ❑
- Kit G.25.3 (NI) gas nozzles for 900 freestanding gas cookers on oven PNC 206458 ❑
- Side handrail-right/left hand (900XP) PNC 216044 ❑
- Frontal handrail, 800mm PNC 216047 ❑
- Frontal handrail, 1200mm PNC 216049 ❑
- Frontal handrail, 1600mm PNC 216050 ❑
- 2 side covering panels for free standing appliances PNC 216134 ❑
- Large handrail - portioning shelf, 400mm PNC 216185 ❑
- Large handrail - portioning shelf, 800mm PNC 216186 ❑
- Pressure regulator for gas units PNC 927225 ❑

The company reserves the right to make modifications to the products without prior notice. All information correct at time of printing.

2024.10.06

Modular Cooking Range Line 900XP 4-Burner Gas Range on Gas Oven

Front

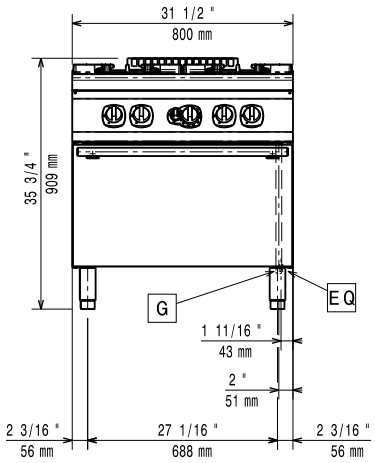

Side

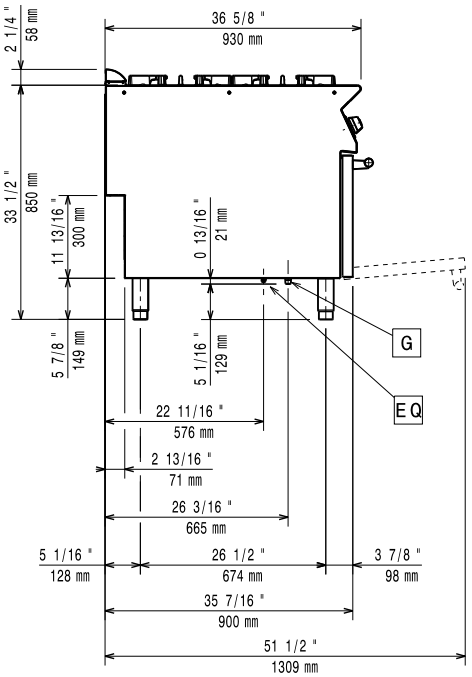

G = Gas connection

Top

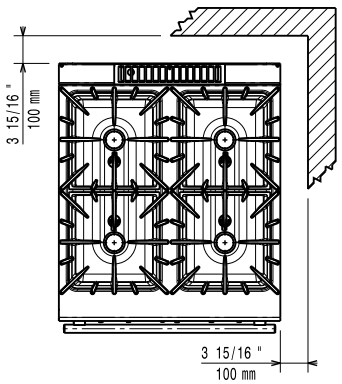

Gas

Gas Power:	
391005 (E9GCGH4CG0)	36.5 kW
Standard gas delivery:	Natural Gas G20 (20mbar)
Gas Type Option:	LPG;Natural Gas
Gas Inlet:	1/2"

Key Information:

Front Burners Power:	6 - 6 kW
Back Burners Power:	6 - 10 kW
Back Burners Dimension - mm	Ø 60 Ø 100
Front Burners Dimension - mm	Ø 60 Ø 60
Oven working Temperature:	120 °C MIN; 280 °C MAX
Oven Cavity Dimensions (width):	575 mm
Oven Cavity Dimensions (height):	300 mm
Oven Cavity Dimensions (depth):	700 mm
External dimensions, Width:	800 mm
External dimensions, Depth:	930 mm
External dimensions, Height:	850 mm
Net weight:	115 kg
Shipping weight:	137 kg
Shipping height:	1080 mm
Shipping width:	1020 mm
Shipping depth:	860 mm
Shipping volume:	0.95 m³

If appliance is set up or next to or against temperature sensitive furniture or similar, a safety gap of approximately 150 mm should be maintained or some form of heat insulation fitted.

Certification group:	N9CG

The company reserves the right to make modifications to the products without prior notice. All information correct at time of printing.

2024.10.06